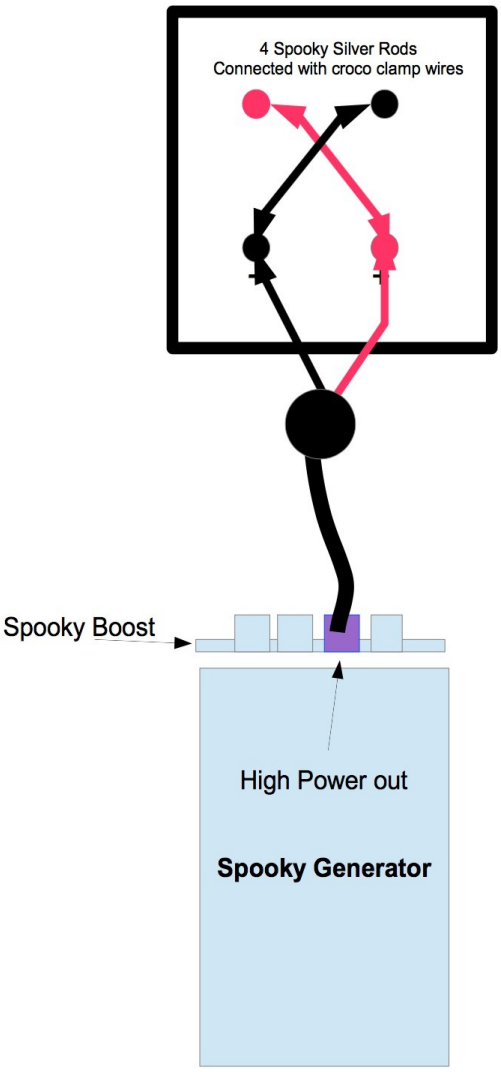

How to connect four silver rods to one generator:

1. Use a tall 1-liter glass container (1 liter is equal to a little over a US quart). See the example below.
2. Cut a square of stiff cardboard large enough to completely cover the mouth of your container.
3. Punch four holes that will hold your rods firmly so that they're not touching each other, about half an inch from the sides of the glass (left), and not touching the bottom.
4. Connect the BNC connector of the alligator clips cable that came with your generator to the High Pwr socket of your Boost, and the clips to the first two silver rods as shown (left.)
5. Connect another two alligator clip cables EXACTLY as shown. You should find these at any electronics store. Or, if you own multiple generators, you can simply snip off the red and black clips cables from a spare. Then strip about half an inch of insulation from the cut end to bare the wire.
6. Wrap each bared end around the tops of the first two rods and make sure the bared wires make contact with the clips so that the signal will reach the other two rods.
7. Connect the extra two alligator clips to the third and fourth rods with the crossover as shown. Reds and blacks should be at opposite corners.
8. Fill your container with distilled water and drop your magnetic stirrer "capsule" in. Then place your rods and holder correctly over the top of the container, and make sure the rods don't touch glass.
9. Load the AR-OMNI Argentum Colloidale (4 rods) preset and click Start,

then turn on your magnetic stirrer and set the speed.

Your OMNI frequency-charged colloidal silver will be ready in four hours. Note that you can also do this with just two rods . In this case, it will take eight hours to complete.

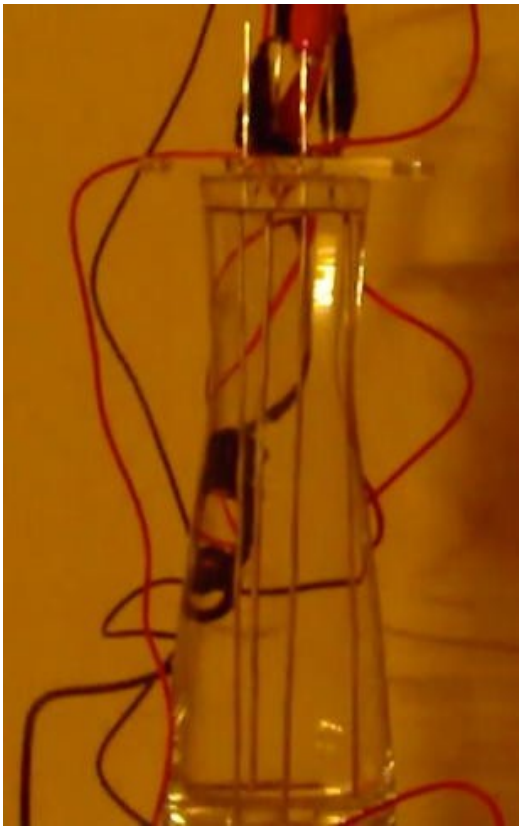

Left: this is the ideal kind of tall 1-liter container to make your colloidal silver in. It's actually a glass vase for cut flowers. The base curves out and the rods don't touch the glass at any point.